StockWeigh 550 EID

& StockWeigh Link

OPERATORS MANUAL

Digi-Star
Fort Atkinson, Wisconsin USA
Digi-Star Europe
Helden-Beringe, The Netherlands

www.digi-star.com

D3645-US Rev D

July 12, 2006

This page intentionally left blank.

Table of Contents

StockWeigh 550 EID 1
What You Get 1
StockWeigh 550 EID Specifications 1
Getting Started 2
Installing StockWeigh 550 EID Indicator 2
Standard Operation (Using Default Settings) 3
Optional Settings 4
Change Setup for Load Cells 4
Changing Options Using Long Form Setup 5

StockWeigh Link™ PC Software 12
Getting Started 12
Read the Software License Agreement 12
Minimum System Requirements 12
Installing the StockWeigh Link™ PC Software 13
Transferring Data from Indicator to PC 13
FILES/Comm Port for StockWeigh 550 EID 13
FILES/Setup Options 14

Appendix A 16
EID Reader 16

Appendix B 17
Weigh Methods 17

Appendix C 18
Net and Gross Mode 18

Appendix D 19
Short Form Calibration 19

Appendix E 22
Scoreboard Methods 22

Appendix F 23
EID Data Formats 23
Print Formats 25

Appendix G 28
Weighing Errors 28

Appendix H 29
Software License Agreement 29

Appendix I 30
Scale Parts 30

Troubleshooting Guide 33

Index 34

StockWeigh 550 EID

The Digi-Star StockWeigh 550 EID indicator is designed to weigh livestock, collect EID (electronic identification) and store the information (tag number, weight, date and time) in the indicator memory for later transfer to a PC. The Lock-On feature allows this scale to weigh active and restless animals within ±1% of actual weight. This indicator can be connected to various load cell systems. StockWeigh Link™ PC Software easily transfers the data that has been collected to a comma separated value (CSV) file on a PC.

What You Get

StockWeigh 550 EID™ Indicator
Power Cable with Battery Clips (for 12 Volt DC Operation)
Power Cube (for 120 Volt AC Operation)
Serial Interface Cable (For Connecting to a PC)
StockWeigh Link™ PC Software CD

Optional Equipment
Allflex™ ISO Compatible RFID Stick Reader (order separately)

StockWeigh 550 EID Specifications

The indicator interfaces with Allflex™ ISO Compatible RFID Readers.

The Indicator can hold information for up to 1536 animals in its memory.

The indicator can connect up to an ordinary PC via the serial port and transfer the livestock data to a PC.

Each line of data has seven data fields including:

1. EID Data
2. Weight Value
3. Unit of Measure (LB/KG)
4. “$” Indicating Weight Locked-On
5. “GR” for Gross or “NT” for Net Mode
6. Date
7. Time

Getting Started

The following steps will allow you to get familiar with your new StockWeigh 550 EID™ indicator. More detailed instructions and option settings follow the "Getting Started" section. For instructions to transfer your livestock data to your PC, see the "StockWeigh Link™ PC Software" section of this manual.

Installing StockWeigh 550 EID Indicator

Connecting Power

Connect power cord to the bottom panel power connector. Power can be obtained from a 12VDC battery or from a 120VAC power cube that plugs into a wall outlet. Power to the EID reader is provided through the Indicator.

NOTE: A small 12V deep cycle lead acid battery will provide many hours of operation for the indicator and the EID reader.

WARNING: Disconnect the indicator from the battery while recharging. Damage can occur to the indicator and the stick reader.

Connecting Load Cells

Connect StockWeigh Load Cell cables provided with your indicator to the two bottom panel load cell connectors. Your StockWeigh indicator has been calibrated at the factory to weigh accurately with these loads cells.

If connecting to load cells that were not provided with your system, the indicator must be calibrated to weigh properly. Contact Digi-Star Technical Support for assistance. Phone (920) 563-9700.

Connecting the Allflex™ Stick Reader

Connect the Allflex™ Stick Reader to the bottom panel connector labeled "EID READER" and tighten thumbscrews. The Indicator provides power to the EID reader. The power receptacle on the EID reader is not used.

CAUTION: Do not hold down the "READ" button on the stick reader while applying power. This will change the configuration of the stick reader.

See the Allflex™ Stick Reader User Manual and Appendix "B" for more reader information.

Turning ON the Scale

Press [ON/Record].

A brief "HELLO" message will be displayed. The scale enters the GROSS weighing mode.

The gross mode displays the weight change since the unit was last ZERO/BALANCED.

Zero Balance the Scale

Press the [NET/GROSS] key and within three seconds, press the [ZERO/RECHECK] key.

The ZERO/BALANCE will "balance off" the dead load such as the platform weight or any attachment to the platform.

"ZERO" is displayed to show completion of the step and the scale is put in the GROSS mode.

Standard Operation (Using Default Settings)

To view and adjust the default setting, see "Optional Settings" starting on page 8.

Reading Eartags and Weighing Animals

1. Connect load cells, power and Stick Reader (page 6) and turn "ON" indicator.
2. "Zero Balance" the scale by pressing [NET/GROSS] then press [ZERO/RECHECK] within 3 seconds.
3. Bring the animal onto the scale platform.
4. After a few seconds, the indicator "Locks On" to an animal's weight, and an "L" will show in the upper left corner of the display. The display now alternates between "NO EID" and the weight of the animal.
5. Push the button on the Allflex™ EID Stick Reader while the end of the stick reader is within range of the EID tag. Once the tag is read, the Stick Reader will "beep" and the LED indication on the Stick Reader will turn from red to green.
6. Release the animal. When the animal steps off the scale, the scale automatically stores and prints the weight data (EID number, Weight, Date, Time etc.).

NOTES: The EID tag may be read any time before, during or after the weight has "Locked-On". The last four digits of the tag will be displayed after it is read.

The EID Tag may be read multiple times. The stick reader will single beep the first time it reads a tag and double beep when it reads the same tag again. This often results in a multiple beep while reading an eartag.

Each time the [ON/RECORD] button is pressed one line of data is stored in memory. Multiple entries can be made for each animal by pressing the button more than once. If the data is stored manually for an animal, the data will not be stored automatically when the animal steps off the scale. The automatic mode will resume for the next animal.

The last four digits of the EID number will be flanked by dashes before the data is stored. Once the data has been manually stored stars flank the data.

Example:

BEFORE STORING --2468-- AFTER STORING *2468*

The EID reader can read data from other devices such as car keys. Such devices can cause confusion if they are read erroneously.

No print device is necessary for operation of the indicator when weighing animals and storing livestock data.

To Recheck Lock-On Weight

While the animal is still on the scale platform, press the [ZERO/RECHECK] key to "RECHECK" or recalculate the weight of the animal. This is the weight that will be printed and/or stored when the animal steps off of the scale platform or the [ON/RECORD] key is pressed.

Low Battery Indication

If the supply voltage drops below the (10.5 Volts), the message "RECHARGE BATTERY -- TURNING OFF" and "LO BAT" will periodically show on the display to alert the operator of the low battery condition. After 2 minutes the indicator will shut off.

WARNING: Disconnect the indicator from the battery while recharging. DAMAGE CAN OCCUR to the indicator and the stick reader.

Self Test

Press [NET/GROSS] then [ON/Record] during normal system operation to start the self-test.

Memory Full Indication

Memory capacity is 1536 lines of data. When memory is 90% full, a warning message will periodically scroll across the screen.

Optional Settings

The Indicator has optional settings that allow flexibility in the way that the scale is used and data is collected.

Change Setup for Load Cells.

The indicator setup and calibration numbers need to be modified when changing load cell type. Follow the steps below to change the setup and calibration numbers.

Enter the "Short Form Calibration Selection" menu by holding [Zero] and pushing [On/Off] for three seconds.

Press [Gross/Net] to advance through the following selections.

3300LB	StockWeigh 3300 with Lock On (pounds)
6600LB	StockWeigh 3300 with Lock On (pounds)
10K LB	StockWeigh 10000 with Lock On (pounds)
14K LB	StockWeigh 14000 with Lock On (pounds)
3300KG	StockWeigh 3300 with Lock On (kilograms)
6600KG	StockWeigh 3300 with Lock On (kilograms)
10K KG	StockWeigh 10000 with Lock On (kilograms)
14K KG	StockWeigh 14000 with Lock On (kilograms)
CUSTOM	Any other load cell. See "Short Form Calibration" in Appendix "A" for detailed instructions.

Press [On/Off] to save desired load cell calibration and exit.

NOTE: If the indicator is not set for weigh method 4 or 8, "Lock-On Weigh Method" the indicator will enter the "Short Form Calibration" menu (see Appendix "A").

Changing Options Using Long Form Setup

1. Enter the Long Form Setup by holding [Net-Gross] and pushing [ON/Record] for three seconds.
2. Press [On/Record] to advance to the desired parameter.
3. Press [Net/Gross] to advance to the proper setting.
4. Press [On/Record] to save setting and advance to the next parameter.
5. Hold [Tare] and press [On] to return to indicator operation.

Default Settings

Default settings for the indicator are as follows:

ZTRACK	ON	DATE	[SET]
W MTHD	4	TAREAP	OFF
LOCKON	8	L PRT	OFF
LKNHLD	OFF	SCOREM	0
AUTOFF	OFF	APRINT	OFF
LSTORE	AUTEID	PRTFMT	AUTO
LSSEND	OFF	C1 DLY	OFF
ESTORE	ON	C2 DLY	OFF
IZERO	ON	COUNT	1
EIDAUT	OFF	ARANGE	ON
TOME F	24 HR	LB-KG	LB
TIME	[SET]	CAP	40000
DATE F	2		

These parameters can be selected, de-selected or adjusted to fit the way you use the scale. See below for descriptions.

ZTRACK Zero Tracking

If “ON”, the scale will adjust for small weight variances of up to 5lbs in the Lock-On weigh method. This allows the scale to compensate for such things as mud or snow accumulation on the scale platform.

W MTHD Weigh Method

Weigh method allows the operator to adjust how much processing or number-crunching the scale processor does to the load cell data before displaying the weight. See Appendix “B” for details. Select weigh method #4 “Lock-On” for animal weighing.

LOCKON Lock-On

Available settings are 1 thru 9. A low value, such as a 1 or 2, allows the system to be more sensitive to animal motion. A high value, such as an 8 or 9, allows the scale to lock on faster. Use the lowest setting that still allows the system to lock on consistently.

LKNHLD Lock-N-Hold

This feature continues to hold the Lock-On weight on the display for an animal after it has stepped off the platform.

This allows the operator to place the animal on the weighing platform, medicate, remove the animal from the platform and then record the animal's weight after it has stepped off the platform. The display will restart once another animal has stepped onto the platform and exceeds 2.5% of the scale capacity. For example if the scale capacity is set at 4000lbs (StockWeigh 3300), 100lbs is required to reset the display. The indicator will return to normal weighing after 5 minutes if no other animal steps on the weighing platform. The [RECHECK] key can be used to return the indicator to the weighing mode.

AUTOFF Auto Off

This feature allows the operator to have the indicator automatically shut itself OFF after either 15, 30, 45 or 60 minutes of inactivity.

This feature will extend battery life on battery powered portable scales. Prior to the scale shutting off, the message "GOODBYE" will be scrolled across the display for approximately 15 seconds. Pressing a key on the indicator during this time will prevent the unit from turning off and restart the internal shut-off timer.

LSTORE Lock-On Store

This feature allows the user to configure how and when weighing data is printed or sent to computer port and stored into memory on the Indicator during animal weighing.

Data that is stored into memory is retrieved using "StockWeigh Link" software.

Manual mode requires the operator to push [ON/RECORD] to store and/or send the data for each animal.

The automatic mode allows the data to be stored and/or sent either by pressing the [ON/RECORD] button, after the scale "Locks-On" or when the animal steps off the platform.

OFF *Off*

- Indicator does not accept EID data.
- Indicator does not store data to memory.
- Sends data to computer port only when TAREAP or APRINT are set to "ON".
- Set PRTFMT to select desired print format. See Appendix F.

MANPRT *Manual Print*

- Indicator does not accept EID data.
- Indicator does not store data in memory.
- Sends time, date and weight data to the computer port when operator presses the [ON/Record] key.
- Set PRTFMT to select desired print format. See Appendix F.

AUTPRT *Automatic Print*

- Indicator does not accept EID data.
- Indicator does not store data in memory.
- Sends Time, Date and Weight data to the computer port when the scale locks-on or when the animal steps off the platform.
- Set LSSEND to select when data is sent.
- Set PRTFMT to select desired format. See Appendix F.

MAN WT *Manual Weight*

- Indicator accepts EID data.
- Message will not alert operator if EID data is missing.
- Indicator does not store data in memory.
- Sends EID, time, date and weight data to the computer port when operator presses the [ON/Record] key.
- Print format is EID print format. See Appendix F.
- Data will print even if EID is not provided.

AUTOWT *Automatic Weight*

- Indicator accepts EID data.
- Message will not alert operator if EID data is missing.
- Indicator does not store data in memory.
- Sends EID, time, date and weight data to the computer port when the scale “Locks-On” or when the animal steps off the platform.
- Set LSSEND to select when data is sent to computer port.
- Print format is EID print format. See Appendix F.
- If LSSEND is “ON”, data will be sent to computer port when scale “Locks-On” to weight. EID must be read before animal is weighed in this mode.
- If LSSEND is “OFF”, and EID is not read, time, date and weight data will be sent when the animal steps off the platform.

MANE I D *Manual EID*

- Indicator accepts EID data.
- Message alerts operator if EID data is missing.
- Sends EID, time, date and weight data to the computer port and stores the comma-separated values (CSV) in memory when operator presses the [ON/Record] key.
- Print format is EID print format. See Appendix F.
- Data is stored in EID data format.
- If ESTORE is “OFF”, data is not stored into indicator memory.

AUTEID *Automatic EID*

- Indicator accepts EID data.
- Message alerts operator if EID data is missing.
- Sends EID, time, date and weight data to the computer port and stores the CSV in memory when the scale “Locks-On” or when the animal steps off the platform.
- Set LSSEND to select when data is printed.
- Print format is EID print format. See Appendix F.
- Data is stored in EID data format. See Appendix F.
- If LSSEND is “ON” and EID is not read, press [ON/RECORD] to print data.
- If LSSEND is “OFF” and EID is not read, time, date and weight data will print when the animal steps off the platform.
- If ESTORE is “OFF”, data is not stored into indicator memory.

MANCHK *Manual Check*

- Indicator accepts EID data.
- Message alerts operator if EID data is missing. Operator must press [ON/RECORD] to print and store data with or without EID.
- Sends EID, time, date and weight data to the computer port and stores the comma-separated values (CSV) in memory when operator presses the [ON/Record] key.
- Print format is EID print format. See Appendix F.
- Data is stored in EID data format. See Appendix F.
- If ESTORE is “OFF”, data is not stored into indicator memory.

AUTCHK *Automatic Check*

- Indicator accepts EID data.
- Message alerts operator if EID data is missing. Operator must press [ON/RECORD] to print and store data without EID.
- Sends EID, time, date and weight data to the computer port and stores the (CSV) in memory when EID data is read and the scale locks-on or when the animal steps off the platform.
- Set LSSEND to select when data is printed.
- Print format is EID print format. See Appendix F.
- Data is stored in EID data format. See Appendix F.
- If ESTORE is “OFF”, data is not stored into indicator memory.

LSSEND

Lock-On-Store Send

- LSSEND is for LSTORE automatic modes and has no effect in manual modes.
- If set to “OFF”, data is sent when animal steps off the platform.
- If set to “ON”, data is sent as soon as the scale LOCKS-ON and EID is read.
- If set to “ON”, press [RECHECK] to recheck the weight and send new data to computer port and/or store in memory if EID requirement is satisfied.

ESTORE

EID Store

In LSTORE modes that send data to computer port and store data into memory, set this selection to “OFF” to send, and not store data into memory. Setting this to “OFF insures that memory will not be filled up and cause a delay due to a “MEMORY FULL” error message.

If set to “ON” indicator will store data in the following LSTORE modes: MANEID, AUTEID, MANCHK, AUTCHK. Use “StockWeigh Link” software to retrieve data from memory.

1 ZERO

One Touch Zero

Set to “On” to zero scale by pressing [Zero] only.
Set to “Off” to zero scale by pressing [Gross/Net] and [Zero].

EIDAUT

EID Auto

IF EIDAUT = “On” and there is no weight on the platform, the indicator prints and stores data (per the LSTORE and ESTORE settings) after the EID tag is read. If there is weight on the scale, and a tag is read, the scale operates normally and EIDAUT has no effect. Set EIDAUT to “Off” in most weighing applications.

TIME F

Time Format

Select either “AM/PM” or “24-HR” time format. This format does not affect EID formats. The EID Print and EID CSV Data Formats always use 24-hour time format.

TIME

Set Time

Use the [NET/GROSS] key to increment each digit and use the [TARE] key to advance the blinking cursor to the left to set the date “mmddyy” field.

DATE F

Date Format

When printing using TAREAP or APRINT, select one of 8 date formats. This setting does not affect EID formats. The EID print format and EID CSV data format always use date format #2 even if another selection is made.

1 = mm – dd	5 = dd/mm/yy
2 = mm/dd/yy	6 = dd/mm/yyyy
3 = mm/dd/yyyy	7 = dd/MM/yy
4 = dd/mm	8 = dd/MM/yyyy

DATE

Set Date

Use the [NET/GROSS] key to increment each digit and use the [TARE] key to advance the blinking cursor to the left to set the date "mmddyy" field.

TAREAP

Tare Auto Print

Set to "ON" to print data when the indicator "TARE" function is used.

1L PRT

One Line Print

Set to "ON" formats printer output data on one line. Set to "OFF" formats printer output data in up to two lines.

SCOREM

Scoreboard Mode

Selects one of several methods to continuously output display data to a scoreboard via com port. See "Appendix E" for details.

APRINT

Auto Print

When set to "ON", pressing keys will automatically print weight values.

PRTFMT

Print Format

Many data output formats are available. See "Appendix F" for details.

C1 DLY

Com 1 Delay

Choose the number of seconds the printer will delay before advancing to the next print line. Select one of the following:

OFF	No delay
.10	1/10 of a second
.25	1/4 of a second
.50	1/2 of a second
.75	3/4 of a second

1	1 Second
2	2 Seconds
3	3 Seconds
4	4 Seconds
5	5 seconds

C2 DLY

Com 2 Delay

Not Used.

COUNT

Display Count

Indicator displays count in increments of 0.01, 0.02, 0.05, 0.1, 0.2, 0.5, 1, 2, 5, 10, 20, 50, and 100.

If the count is set too small, the readings will be unstable and the indicator will not be accurate.

ARANGE Auto-Range

If “ON” the scale increases display count size for weights over 300 and again at 600 lbs/kgs. If set to “OFF” display counts are set and do not vary.

For example: 0 to 300 lbs (1 lb Increment), 300 to 600lbs. (2 lbs Increments), 600 and up (5 lbs. Increments).

LB-KG Display Unit

Select desired weight unit to be displayed.

When changing weight unit using the long form, the calibration is adjusted so the scale displays accurately in the new display unit.

CAP Capacity

Enter MAXIMUM weight measurable on scale.

StockWeigh Link™ PC Software

StockWeigh Link™ software can be configured to automatically or manually import the data collected by the Indicator. The tag number, weight, date, time and other information is transmitted from the Indicator and stored in CSV (Comma Separated Value) file that works easily with ordinary spreadsheet programs like Microsoft Excel®.

Getting Started

This section takes you through the necessary steps to install the software and to run your StockWeigh Link™ Software using default settings. Take some time to review this section before beginning the installation process.

Read the Software License Agreement

Read the Digi-Star® Software License Agreement in "Appendix E". When you break the seal on the CD, and install the software, you agree to the terms of the license agreement.

Minimum System Requirements

Make certain that your PC includes the following hardware and software. These are the minimum system requirements to run StockWeigh Link PC ™.

A Pentium™ 100 or better PC
Microsoft Windows98, 2000, ME, XP or NT™
100 Meg Free disk space
32 Meg Ram
CD Drive
A mouse
Printer
A serial port
Or
A USB port and a USB to Serial Port Adapter

NOTES: A USB to Serial Port Adapter can be used if your PC does not have a free serial port. The serial port must be assigned to a port number 1 to 8. A higher comm. port setting will not work with the StockWeigh Link™ program.

Certain programs can interfere with the operation of the serial port / StockWeigh Link™. These programs include Palm Desktop and some auto ID software. If these programs are installed and running on the PC you intend to use for the StockWeigh Link™ system, they must be shut off when reading / writing to the Indicator™. Failure to shut these programs off during this sequence may result in errors and lost data.

Installing the StockWeigh Link™ PC Software

The StockWeigh Link™ PC software is shipped to you on a CD. To install the software:

1. Close all other open programs.
2. Insert the CD into the drive. If Auto Run is enabled on your computer, follow the installation instructions.

   If the installation screen does not appear, go to Start and select Run. From the Run menu, browse the CD and select "setup.exe". The install screen will now appear. Follow the installation instructions.
3. Disconnect the computer from the StockWeigh 550 computer port.
4. Double-click on the "StockWeigh Link icon to start the program.
5. Click on the StockWeigh Link icon in the taskbar.
6. A window should pop up and run the "Find Comm Port with StockWeigh 550". The program will direct you to "Plug the StockWeigh 550 onto a working comm. Port and press the start button".
7. Connect one end of data cable to a serial port (DB-9 connector) on your PC. If you have a USB port but no serial port, use a "USB to Serial Port Converter".
8. Connect the other end of data cable to indicator bottom panel DB-9 connector labeled "COMPUTER". Press the start button.
9. Attach power to the indicator and press the [ON] key.
10. Click on the "START" box on your PC screen.
11. The program will search and find the comm. port.
12. Enter the 6-digit StockWeigh Link™ serial number from the CD.
13. If the "Setup Options" window appears click on "OK" to select the default settings. See "FILES/Setup Options" below for instructions.

Transferring Data from Indicator to PC

CAUTION: Do not connect both the stick reader and the computer to the Indicator while the StockWeigh Link program is running.

1. Check that the StockWeigh Link™ icon is on your taskbar. This indicates that the software is installed, running and ready for the next step. Allow the StockWeigh Link software to run 15 seconds before proceeding.
2. Connect one end of data cable to a serial port (DB-9 connector) on your PC.
3. Connect the other end of data cable to indicator bottom panel DB-9 connector labeled "COMPUTER".
4. Connect power to the indicator and press the [ON/RECORD] key.
5. If configured for "Auto detect" a window pops up indicating that the data is being transferred. When it is complete the window will be cleared.

FILES/Comm Port for StockWeigh 550 EID

This command instructs the computer to search available comm. ports for the one that is connected to the Indicator. This command runs automatically immediately after software is loaded.

FILES/Setup Options

This command opens a dialog box to enable the operator to configure the software. The available settings are:

Received Text File Storage

File Path

Enter file path for the folder that contains the data files. The default file path is C:\StockWeigh\Data.

Fixed File Name

Always store data to same file in the folder defined in "File Path" field. A text entry box will appear

CAUTION: Previously existing data file will be overwritten and lost when using fixed file name. Use Date Specific File Name (see below) to avoid loss of data.

NOTE: Make sure destination file is not open in another program when writing to that file.

Ask Each Time for File Name

PC prompts operator for filename each time data is stored to the PC. File is stored in folder described in "File Path" field. The default file location is C:\StockWeigh\Data.

Date Specific File Name [yymmdd_xx.csv]

A unique filename is automatically generated by the program. The filename includes the date and sequential number. File is located in folder defined in "File Path" field. The default file location is C:\StockWeigh\Data.

Examples:

C:\StockWeigh\Data \092803_00.csv

C:\StockWeigh\Data \092803_01.csv

Auto File Retrieval

Auto Detect StockWeigh and Retrieve Livestock Data

With above selection, the PC senses that the indicator is connected, and automatically stores the data in a CSV file. StockWeigh Link software must be running 15 seconds before indicator is connected.

Only Retrieve Livestock Data by Operator Demand

With above selection, the operator must enter the utilities menu and select the command "Read StockWeigh 550 EID" to transfer data from the indicator to a CSV file in the PC.

Clear StockWeigh 550 EID Memory Mode

Auto Clear After Read

If selected, the StockWeigh 550 EID memory data memory will be cleared automatically after it is read and stored on the PC.

Ask to Clear After Read

If selected, the program will ask the operator "Do you wish to clear the StockWeigh 550 EID memory?" after the data is read and stored on the PC.

Only Clear with Function Control

If selected, the operator must enter the utilities menu and select the command "Clear StockWeigh 550 EID Memory"" to clear the memory in the indicator.

NOTE: If indicator memory is not cleared before reading more eartags, the new EID data will be appended to the previously read EID data. Memory capacity will be used up by the old data and duplicate data will be transferred to the PC.

Printing File from StockWeigh 550 EID

No Printing

If selected, data is not printed when data is downloaded from the indicator to the PC.

Ask Each Time if the Livestock Data is to be Printed

If selected, the program asks "Do you wish to print the livestock data file?" after downloading data to your PC. Operator can then determine if a print is created.

Automatically Print the Livestock Data Each Time

If selected, the program will print the data file when it is transferred to the PC.

UTILITIES/Clear the StockWeigh 550 EID

This command clears the Indicator memory. This command is un-necessary if the program is set to perform the CLEAR function automatically (see above) "Clear StockWeigh 550 EID Memory Mode".

If Indicator Memory is Not Cleared

- It is possible to store duplicate data onto your computer.
- New data that is stored into memory is appended to the existing data and the old data will be transferred to the PC with the new appended data.
- It is possible to fill up existing indicator memory if more than 1536 data lines are stored.

UTILITIES/Read the StockWeigh 550 EID

This command reads the Indicator memory and loads it into a "CSV" formatted file. See "FILE SETUP" menu for file path, file name, print and clear memory options.

CAUTION: Duplicate files can be created using this command. Be aware that data file may be automatically created when indicator is connected to PC.

HELP

The "About" screen contains the software version number and serial number. The "Instructions" screen contains a text file with detailed instructions.

Appendix A

EID Reader

WARNING:	***The StockWeigh 550 EID connects to Allflex™ ISO Compatible RFID Stick Readers only. Do not attempt to use with other RFID readers or peripherals that are not approved by Digi-Star.*** ***DAMAGE MAY OCCUR.***

CAUTION:	*The ALLFLEX™ Stick Reader reconfigures the output format if the button is depressed while powering "ON". Be careful not to lay the stick reader with the button down while applying power.*

NOTES: The Allflex™ Stick Reader gets its power from the StockWeigh EID 550 "EID Reader" port and does not use an external power cube.

If there is a problem with the Allflex™ RFID Stick Reader or the number of characters it is transmitting, follow the procedure below to re-configure the stick reader to the TIRIS S2000 output format.

Refer to the Allflex™ RFID Stick Reader manual for details.

Re-Configuring the Allflex™ Stick Reader

1. Turn power off on the StockWeigh 550 EID indicator.
2. Connect the Stick Reader to the EID Reader port.
3. Press and hold the "READ" button on the Stick Reader while pressing the "ON" button on the indicator.
4. After 2 seconds, the Stick Reader will respond with 6 flashes and 6 beeps. Release the "READ" button.
5. Press the "ON" button on the Indicator to start the self-test. Wait for the test to finish and press the "NET/GROSS" key after the prompt to re-configure the Stick Reader to the TIRIS 2000 output format.
6. If re-configure is successful, indicator will display "GOOD". If indicator displays "ERROR", try procedure again.

.....

Contact Digi-Star Technical Service if problems persist.

Appendix B

Weigh Methods

Select weigh method #4 for animal weighing. The EID features require the indicator to be set in this mode. If you choose to use the StockWeigh 550 EID for weighing dead loads, you can still use the Lock-On Weigh method but you may wish to use one of the other methods listed below.

NOTE: Most of the StockWeigh 550 EID features require weigh method #4.

General - Weigh Method #1

The General weigh method is an all-purpose weigh method for weighing dead loads. It is used for most applications.

Slow - Weigh Method #2

The Slow weigh method attempts to provide higher accuracy by filtering many weight samples over a longer period of time. Small, instantaneous weight changes have less effect on the displayed weight using this technique. This method is for weighing dead loads.

Fast - Weigh Method #3

The Fast weigh method is more sensitive to weight changes than the other weigh methods. When a weight changes quickly, the Fast method tries to determine the new weight as quickly as possible. This is done by providing less filtering during the actual "weight change." When the weight begins to stabilize, filtering is increased to provide an accurate weight display. This method is for weighing dead loads.

Lock-on - Weigh Method #4

Set to “LOCKON” for animal weighing, this allows scale to weigh active animals and display an accurate weight that does not fluctuate. Set to “OFF” for weighing dead weights. Lock-On sensitivity can be adjusted using the “LOCKON” menu.

Once the actual weight is displayed, the scale “Locks-On” to the displayed. Weight does not change, even if the motion never stops. A small ‘L’ appears on the left side of the display indicating the weight is “Locked-On.” The animal’s weight must be greater than 2.5% of the scales “capacity” weight before the system can “Lock-On.”

In order to break the lock, 50% of the displayed weight must be either added or removed from the scale. The “Locked-On” weight can be “rechecked” by pressing the [ZERO] key on the front panel. This breaks the “lock” and the scale recalculates the weight.

NOTE: Setting the Weigh Method in the Long Form does not affect the Display Unit LB-KG.

NOTE: In Weigh Method #1, #2 and #3 the ZTRACK (zero-tracking) removes up to 0.05% of the scale capacity (as shown in setup). In Weigh Method #4 the weight that can be removed is set to 5lbs(2.2kg).

Appendix C

Net and Gross Mode

To Select Gross Mode

GROSS mode displays the weight change since the unit was last ZERO/BALANCED.

Press [NET/GROSS]

NOTE: The scale is in GROSS mode if there is a flashing arrow pointing toward the GROSS text just above the [ON/RECORD] key.

Gross mode is used for all single animal weighing.

To Select Net Mode:

NET mode displays the weight change after a TARE has been performed. TARE is a temporary "zero" point.

If the scale "TARE" weight has not been entered, press [TARE] to acquire a "zero."

Or

If in Gross mode, press [NET/GROSS]. The [NET/GROSS] key is an alternating action key. If the scale is in the GROSS mode, pressing the [NET/GROSS] key will place it in the NET mode. If the scale is in the NET mode, pressing the [NET/GROSS] key will place it in the GROSS mode.

The scale is in NET mode if there is a flashing arrow pointing toward the NET text in the lower left corner of the display.

Appendix D

Short Form Calibration

NOTE: For systems with Digi-Star StockWeigh Load Cells see page 5 for setup instructions.

The Short Form Setup & Calibration procedure allows you to change the “SETUP” and “CAL” numbers of the indicator.

Setup Number

The “SETUP” numbers affects some parameters that also appear in the Long Form Calibration. Following is a list of functions that are controlled by the “SETUP” number:

Weigh Method (W MTHD)
Display Units (LB-KG)
Display Counts (COUNT)
Gain
Scale Capacity

Calibration Number

The “CAL” number is adjusted to make the scale read the proper weight for different load cells and to make accuracy adjustments on a scale system.

If a StockWeigh 550 EID indicator is provided with StockWeigh load cells as a package, the calibration number is adjusted at the factory for maximum accuracy. Systems that are assembled from separate components are given “STANDARD SETUP AND CALIBRATION NUMBERS” and are not factory calibrated. These systems should be checked and adjusted if necessary using known weights to insure accuracy. See “Calibrating the Scale for Maximum Accuracy” below.

Following is a list of Standard Setup and Calibration numbers for StockWeigh 3300, 6600 and 14000 load cells. If you are not using StockWeigh load cells, contact Digi-Star Tech Support at 920-563-9700 for setup and calibration information:

Scale Type	Unit	Setup #	Calibration #
StockWeigh 3300	Lb	413004	776
StockWeigh 6600	Lb	413007	1560
StockWeigh 14000	Lb	443015	13828
StockWeigh 3300	Kg	812002	352
StockWeigh 6600	Kg	812003	708
StockWeigh 14000	Kg	843007	6272

Calibrating the Scale for Maximum Accuracy

Before continuing, first write down the current SETUP and CAL numbers of your EZ indicator. These numbers are displayed during the Self Test. To run the self-test with the indicator already ON, hold the [NET/GROSS] key and press the [ON/RECORD] key to start the Self Test. Press the [ON/RECORD] key to "pause" the Self-Test while numbers are displayed. Press the [ON/RECORD] key again to "resume"

SETUP # _____ CAL # _____

To accurately calibrate the scale, you will need a large amount of weight that has a known value. For best results you should have at least as much weight as the largest load you plan to weigh.

Determining the New Setup and Calibration Numbers

1. Zero-Balance the scale so the display reads zero.
2. Put the KNOWN WEIGHT on the scale platform and write down the WEIGHT DISPLAY.

Perform the following equation to find the ACCURATE CAL #.

$$\frac{\text{KNOWN WEIGHT}}{\text{WEIGHT DISPLAY}} \text{ X EXISTING CAL \# = ACCURATE CAL \#}$$

Example:

The KNOWN WEIGHT is 1000lbs, but the WEIGHT DISPLAY is 950lbs. The EXISTING CAL # is 776.

$$\frac{1000}{950} \text{ X } 776 = 817$$

817 is the ACCURATE CAL #. The setup number does not change.

To Enter a New Setup and Calibration Number

Short Form Calibration

The Short Form Setup & Calibration procedure allows you to change the “SETUP” and “CAL” numbers of the indicator. You may want to perform this procedure if the indicator is being connected to different load cells or if the scale is inaccurate and you have some accurate known weights to use for calibrating the scale.

Before continuing, first write down the current SETUP and CAL numbers of your EZ indicator. These numbers are displayed during the Self Test.

To run the self test with the indicator already ON:

Press [NET/GROSS] and then press [ON/RECORD] to start the self-test.

Press [ON/RECORD] to pause the self-test to view the SETUP and CAL numbers.

Press [ON/RECORD] again to allow the self-test to complete normally.

.SETUP # _____ CAL # _____

CAUTION: Do not attempt to calibrate the scale if the indicator is not reading stable weights. The calibration procedure will not fix instability, inconsistencies, or flashing "RANGE" messages.

Hold [ZERO/RECHECK] and hold [ON/RECORD] for 3 seconds to enter the short form calibration. The display will flash “SETUP” and then display the 6-digit setup number with the right digit flashing. To modify the setup number:

1. Press [Net/Gross] several times to increment the digit to the proper value.
2. Press [TARE] to advance the blinking digit to the left.
3. Repeat steps 1 and 2 for each digit as required.
4. Press [ON/RECORD] to enter the new setup number and display the calibration number.
5. Repeat steps 1 and 2 to modify the calibration number.
6. Press [ON/RECORD] to enter the new calibration number and the display will go back to normal.
7. Verify the accuracy of the scale and the procedure is complete!

Appendix E

Scoreboard Methods

There are ten scoreboard methods available. Methods one thru six sends numeric display data out the RS232 port periodically while the other methods send a data stream as described below.

1. Transmit numeric display data once per second.
2. Transmit numeric display data two times per second.
3. Transmit numeric display data three times per second.
4. Transmit numeric display data at the A-D conversion rate.
5. Transmit numeric display data at the display rate.
6. Transmit numeric display data whenever there is a display weight change.
7. Transmit status data string every second. Status data string includes weight, rotation counter data, date and time.
8. Transmit status data every five seconds. Status data string includes weight, rotation counter data, date and time.
9. Reserved.
10. Transmit EID data string every 2 seconds.

NOTES: When using SCOREM = 1, 2, 3, 4, 5, 6 and 9 be sure to set LSTORE = OFF, TAREAP = OFF and APRINT = OFF to avoid corrupted data when transmitting scoreboard data and printing scale data.

When using SCOREM = 7, 8 and 10, print data will not be corrupted by scoreboard data.

Appendix F

EID Data Formats

Data is output thru the computer port to be stored in a computer or printed. There are many different data formats to choose. The “LSTORE” mode can configure the data format automatically or allow the user to set the print format by using the “PRTFMT” menu.

LSTORE Data Formats

Use the “PRTFMT” menu in the following three “LSTORE” modes:

OFF		See “PRTFMT” Appendix “F” menu to set data format.
MANPRT	Manual Print	
AUTPRT	Auto Print	

The following “LSTORE” modes automatically configure the print format for animal weighing with EID data.

MAN WT	Manual Weight	See EID Print Format and CSV Data Format
AUTOWT	Automatic Weight	
MANEID	Manual EID	
AUTEID	Automatic EID	
MANCHK	Manual Check	
AUTCHK	Automatic Check	

EID Print Format

EID print data is transmitted out the COMPUTER port on the bottom of the indicator while weighing animals.

NOTE: When using computer port for EID data, make sure SCOREM is set to “0”, TAREAP is set to “OFF” and APRINT is set to “OFF”.

EID data may vary in number of characters, spaces etc. Refer to the Allflex™ Stick Reader User Manual for more information.

```
C>XXXXX>X>XXX>XXXXXXXXXXXX,
XXXXXX,LB,$,GR,mm/dd/yy,hh:mm,Z<cr><lf>
```

Examples of EID Print Format:

```
A 00000 0 982 000017383201,<cr><lf>
   890,LB,$,GR,8/27/03,10:15,_<cr><lf>

A 00000 0 982 000017383201,<cr><lf>
  1001,LB, ,GR,8/27/03,10:21,M<cr><lf>
```

EID Print Data Format always uses date format #2 and 24-hour time format as shown.

EID CSV Data Format

EID CSV Data is collected from the eartag using the EID Stick Reader and stored in memory along with weight, date, time and other information. There are eight data fields each separated by a comma followed by carriage return and line feed:

Field 1	EID Data
Field 2	Weight Value
Field 3	Unit of Measure (LB/KG)
Field 4	“$” Indicates Weight Locked-On
Field 5	“GR” or “NT” Gross or Net Mode
Field 6	Date
Field 7	Time
Field 8	Checksum Character
Carriage Return	
Line Feed	

There are the four modes that store the EID CSV data into indicator memory.

MANEID	Manual EID
AUTEID	Automatic EID
MANCHK	Manual Check
AUTCHK	Automatic Check.

Data is formatted as a CSV file and is transferred to the PC. CSV files make it easier to input scale data into PC Spreadsheet and Data Base programs.

Following is an example of two data lines. Note that in the last line of data, no “$” is shown because the weight was not “Locked-On.

Examples of EID CSV Data:

```
A 00000 0 982 000017383201,   890,LB,$,GR,8/27/03,10:15,_<cr><lf>
A 00000 0 982 000017383201,  1001,LB, ,GR,8/27/03,10:21,M<cr><lf>
```

Print Formats

PRTFMT is active when “LSTORE” is set to “OFF”, “MANPRT” or “AUTPRT”. Following is a detailed explanation of the print formats that are available on the StockWeigh 550 EID. Some are Comma Separated Values (CSV) that make it easier to input scale data into PC Spreadsheet and Data Base programs.

NOTE: The appearance of the printouts may be affected by the option settings of 1L PRT, TIME F and DATE F.

AUTO

If “LSTORE” is set to “MANPRT” or “AUTPRT” and “PRTFMT” is set to “AUTO”, the standard EZ Indicator print format will be used.

Print example:

```
09MR04 10:15
   880LB$GR
```

WTONLY

Includes weight, display unit, $' if unit is "locked on", weight tag (GR, M+, etc.).

Ends with a <CR>,<LF>.

Print example:

```
    635LB$GR
```

DOWNLD

This format is compatible with the original Downloader.

Includes weight, display unit, $' if unit is "locked on", weight tag (GR, M+, etc.) date and time.

DT+TM

This CSV format includes weight, display unit, $' if unit is "locked on", weight tag (GR, M+, etc...) and date.

Ends with a <CR>,<LF>.

Print example:

```
"     610,LB, ,GR,13MR02,11:08"
```

ID+TM

This CSV format includes ID, weight, display unit, $' if unit is "locked on", weight tag (GR, M+, etc...) and time.

Ends with a <CR>,<LF>.

Print example:

```
"      ,      0,LB, ,GR,11:08"
```

IDWTTM

This CSV format includes ID, weight, display unit, $' if unit is "locked on", weight tag (GR, M+, etc...), date and time.

Ends with a <CR>,<LF>.

Print example:

```
"FARM 1,  16090,LB, ,GR,27JA00,10:37P"
```

ANIMAL

This CSV format includes information for animal weighing.

Includes $' if unit is "locked on",weight, weight tag (GR, M+, etc...), display unit, Memory Weight (RM), Average Count (Number of times M+ key was pressed), Average Weight, Gross weight on scale, ID, date and time.

Ends with a <CR>,<LF>.

Print example:

```
" ,   1400,GR,LB,   2180,   4,    545,   1400,      ,11:09,13MR02"
```

3200 A — See service bulletin # 19 for details.

3200 B — See service bulletin # 20 for details.

32 TMR — See service bulletin # 19 for details.

BATCH1 — Contact Digi-Star technical support for details.

FDINFO — Contact Digi-Star technical support for details.

WTRCTM

This CSV format includes basic weighing information.

Includes Gross Weight, display unit, weight tag (GR, M+, etc...), Total Rotation Count, Date & Time.

Ends with a <CR>,<LF>.

Print example:

```
"    280,LB,GR,  187,03JL03, 3:41P"
```

EIDINF

This CSV format includes EID memory status information.

Ends with a <CR>,<LF>.

The response from the StockWeigh 550 EID Indicator will be as follows:

“uuuuuu,UUUUUU,mmmmmm<CR><LF>”

uuuuuu = Used Livestock EID lines (6 digits)

UUUUUU = Un-used Livestock EID lines (6 digits)

mmmmmm = Maximum Livestock EID lines (6 digits)

<CR> 'Carriage Return' [0D] hex or [13] decimal

<LF> 'Line Feed' [0A] hex or [10] decimal

Print example:

```
"   157,  1379,  1536"
```

EID

This CSV format includes EID tag number if available, weight info, date, and time.

Print example:

```
                          ,
    860,LB,$,GR,03/09/04,08:58,j
```

Print example (1L PRT=ON):

```
                          ,    860,LB,$,GR,03/09/04,08:58,j
```

NOTE: Only the StockWeigh 550 EID indicator supports EID memory storage.

Definitions

{cr}	ASCII control code "Carriage Return".
{lf}	ASCII control code "Line Feed".
>	Represents a SPACE.
ddmmyy	Date (Day, Month, & Year). See page xx for other date formats.
hh:mm	Time (hours:minutes)
A	Either A (AM), or P (PM) or a space. See page xx for time formats.
X	Number (0-9), or a SPACE, or a minus sign (-).
LB	Either Pounds (LB), or Kilograms (KG).
$	"$" if "Locked-On", SPACE if not "Locked-On".
GR	Either Gross (GR) or Net (NE).
Z	Checksum character.
C	An alphanumeric character.

Appendix G

Weighing Errors

OVRCAP

Capacity Limit:

The display shows the message "OVRCAP" if the weight on the scale system exceeds the capacity limit. The capacity value is entered in SETUP to warn of overloading the scale system.

+RANGE

Over Range:

The display shows the message "+RANGE" if the weight on the scale system exceeds the maximum weight measurable by the scale system. The over range value is always the system's maximum A/D counts multiplied by the scaling factor. The actual weight at which over range occurs depends on the calibration, zero, and display count size.

-RANGE

Under Range:

The display shows the message "-RANGE" if the weight on the scale system is less than the minimum weight measurable by the scale system. The under range value is always the system's minimum A/D counts multiplied by the scaling factor. The actual weight at which under-range occurs will depend on the calibration, zero, and display count size.

NOTE: The EZII Series supports –RANGE that is equal to +RANGE in absolute value.

Appendix H

Software License Agreement

Digi - Star® LLC

IMPORTANT: The Digi-Star® software being installed by you or by our technical staff will be licensed to you, the licensee, on the condition that you agree with DIGI-STAR® LLC ("Digi-Star") to the terms and conditions set forth in this legal agreement. PLEASE READ THIS AGREEMENT CAREFULLY, YOU WILL BE BOUND BY THE TERMS OF THIS AGREEMENT IF YOU INSTALL, OR IF YOU HAVE DIGI-STAR®'S TECHNICAL STAFF OR AUTHORIZED REPRESENTATIVE INSTALL SOFTWARE FOR YOU. If you do not agree to the terms contained in this agreement, please return the disk package to your dealer for a full refund, or do not have a Digi-Star® technician or authorized representative install this software. Once you have allowed the software to be installed you are bound by this agreement.

If you agree to these terms and conditions, Digi-Star® grants to you a nonexclusive license to use the accompanying software (the "Software") and documentation. The Software and the documentation are referred to in this Agreement as the "Licensed Material".

1. Ownership

The Licensed Materials are the sole and exclusive property of Digi-Star® and are protected by U.S. Copy Right Law and international Treaty Provisions. By paying the license fee and by installing, or by allowing a Digi-Star® technical or authorized representative to install the software, you do not become the owner of the Licensed Material according to the terms of this agreement.

2. License

The license granted to you by Digi-Star® in this agreement authorizes you to use the Software on any single computer, or any replacement for that computer. The Software may not be used on a Network Server. A separate disk, licensed under an additional software agreement, is required for any other computer on which you wish to load the Software. YOU MAY NOT USE, COPY, OR MODIFY THE LICENSED MATERIAL IN WHOLE OR PART, EXCEPT AS EXPRESSLY PROVIDED IN THIS AGREEMENT.

3. Term

This Agreement is effective from the date on which you open the sealed disk package and installed the Software or have the Software installed by Digi-Star®. This agreement may be terminated by you at any time by destroying the Licensed Material, together with all copies, modifications and merged portions in any form. It will also terminate automatically if you fail to comply with any term of condition of this agreement.

4. Restrictions and Transfer

You may not sublicense, assign, share, rent, lease, or otherwise transfer your right to use the Licensed Material, nor any other rights granted to you under this agreement, except stated in this paragraph. You may permanently transfer the software to any other party if the other party is purchasing your business operation, the other party agrees to the terms and conditions of this agreement, you transfer all copies of the Licensed Material to that party, or destroy those which are not transferred and that new party pays a license transfer fee of 25% of the original license fee. By such transfer, you terminate the license granted to you in this agreement.

5. Restrictions against copying or modifying the Licensed Material

The Licensed Materials are copyrighted by Digi-Star®. Except as expressly permitted in this agreement, you may not copy or otherwise reproduce the Licensed Materials. In no event does the limited copying or reproduction permitted under this Agreement include the right to decompile, disassemble, or electrically transfer the Software in any form, in whole or in part, or of any modification of the Software, or any updated work containing the Software, or any part thereof. You also agree not to remove any existing copyright notice of the License Materials.

6. Protection and Security

You agree to use your best efforts and take all reasonable steps to safeguard the License Materials to ensure that no unauthorized person has access to them and that non authorized copying, publication, disclosure, or distribution of any of the Licensed Material is made. You acknowledge that the Licensed Materials contain valuable, confidential, and trade secrets and that unauthorized use and copying are harmful to Digi-Star® and its software suppliers, and that you have the confidential obligation on such valuable information and trade secrets.

7. Limited Warranty

Digi-Star® warrants that the media on which the Software is recorded will be free from defects in workmanship and materials for a period of 90 (ninety) days from the payment of the license fee, and if Digi-Star® determines the media to be defective and provided the media was not subject to misuse, abuse, or use in defective equipment, Digi-Star® will replace the media. ALL IMPLIED WARRANTIES ON THE MEDIA, INCLUDING IMPUTED WARRANTIES OF MERCHANTABILITY AND FITNESS FOR A PARTICULAR PURPOSE, ARE LIMITED TO THE DURATION OF OF THE EXPRESS WARRANTY SET FORTH ABOVE. IN NO EVENT WILL DIGI-STAR® OR ANY OTHER PARTY WHO HAS BEEN INVOLVED IN THE CREATION, PRODUCTION, OR DELIVERY AND INSTALLATION OF THE LICENSE MATERIALS BE LIABLE FOR SPECIAL, DIRECT, INDIRECT, OR CONSEQUENTIAL DAMAGES, IN NO EVENT SHALL DIGI-STAR®'S OR SUCH OTHER PARTY'S LIABILITY FOR ANY DAMAGE, OR LOSS TO YOU OR ANY OTHER PARTY EXCEED DIGI-STAR REPLACING THE MEDIA ON WHICH THE LICENSED MATERIALS HAS SUPPLIED.

8. General

If any provision or of portion of a provision of this Agreement is determined to be invalid under any applicable law, it shall be deemed omitted and the remaining provision and partial provisions of this Agreement shall continue in full force and effect.

This Agreement constitutes the entire agreement between the parties with respect to the subject matter hereof, and all prior agreements, statements and undertakings are hereby expressly canceled.

Appendix I

Scale Parts

StockWeigh 550 EID Indicators, Part Numbers 403622 and 403623

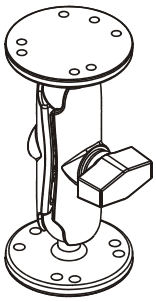

Ram Mount

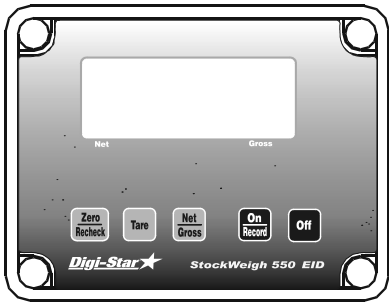

StockWeigh 550 EID

Separate 6’ Power Cord P/N 403643 and
Power Converter with 6’ Cord P/N 403526

StockWeigh Load Cells

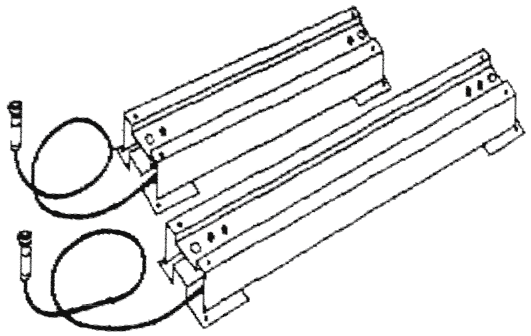

Load Cells:..... Model 3300 16” – P/N 148042 24” – P/N 146769 33½” – P/N 400144
Model 6600 33½” – P/N 400058 44” – P/N 400006

Load Cells Without Connectors:

Model 3300 16” – P/N 403481 24” – P/N 403482 33½” – P/N 403483

Model 6600 33½” – P/N 403484 44” – P/N 403485

Model 14,000 P/N 400161

StockWeigh Load Cell Specifications

Gross Capacity
Model 3300: 3300 lbs. Maximum
Model 6600: 6600 lbs. Maximum

Accuracy: ±1% and ±1Display Increment

Load Cell Overall Dimensions

Model 3300: 3¾” H x 8¼” W x 16, 24 & 33½” L
Model 6600: 3¾” H x 8¼” W x 33½ & 44” L

Load Cell Cable Length: 14 Feet

Resolution (For Both Models)

Increment	Range
1 lbs or kgs	0-300 lbs or kgs
2 lbs or kgs	300-600 lbs or kgs
5 lbs or kgs	600 lbs or kgs

Power Requirements: 12-14 VDC @ approx 1 Amp

AC to DC Converter
110 VAC to 13.8VDC @ 1.2 Amps

StockWeigh Alley Platform PN 403360

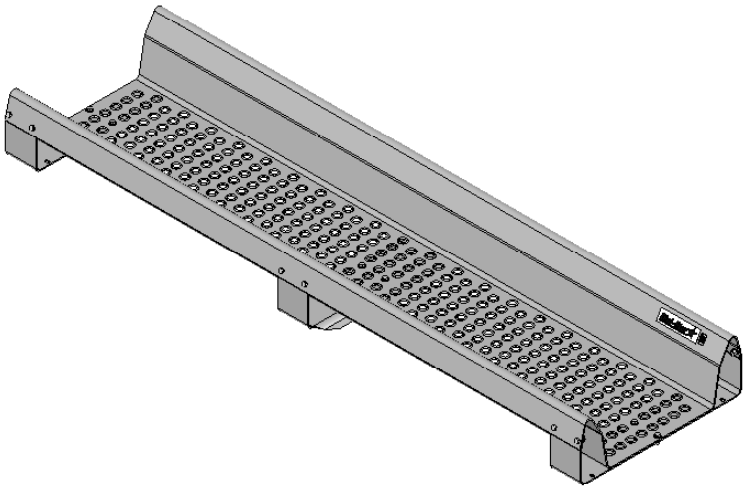

Scale System with StockWeigh Alley Platform

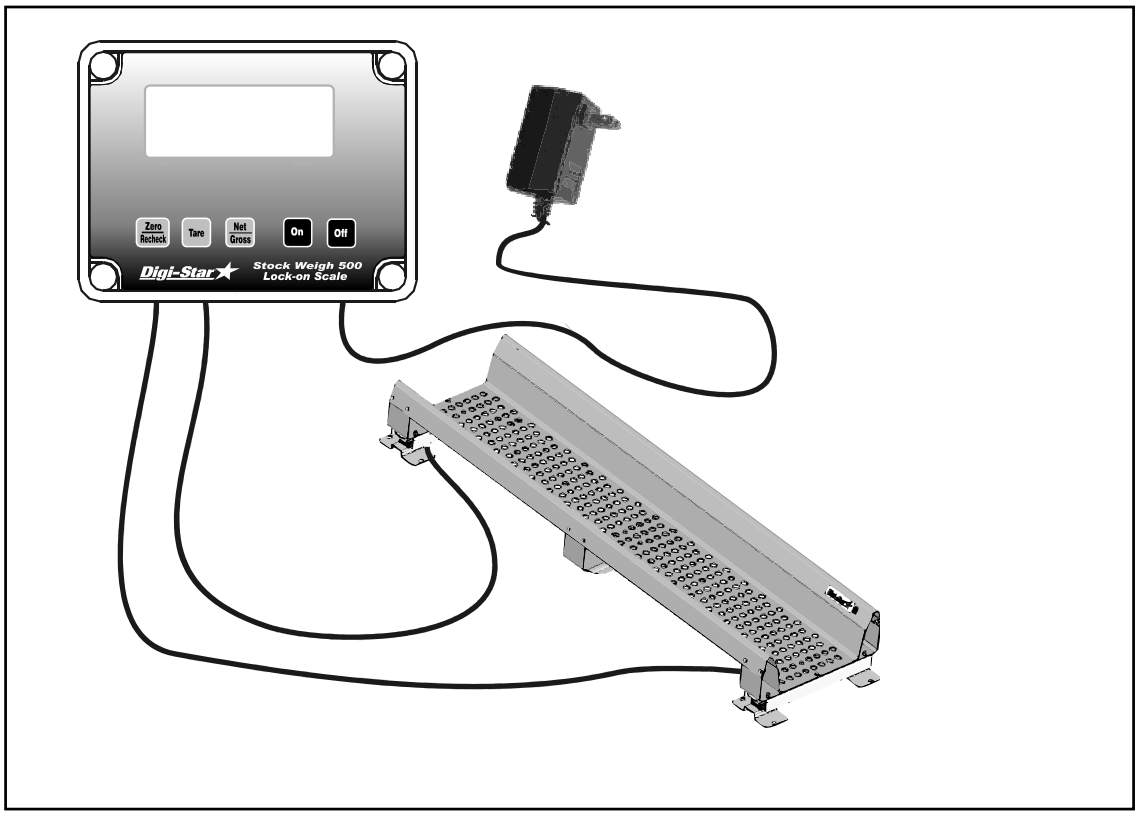

Troubleshooting Guide

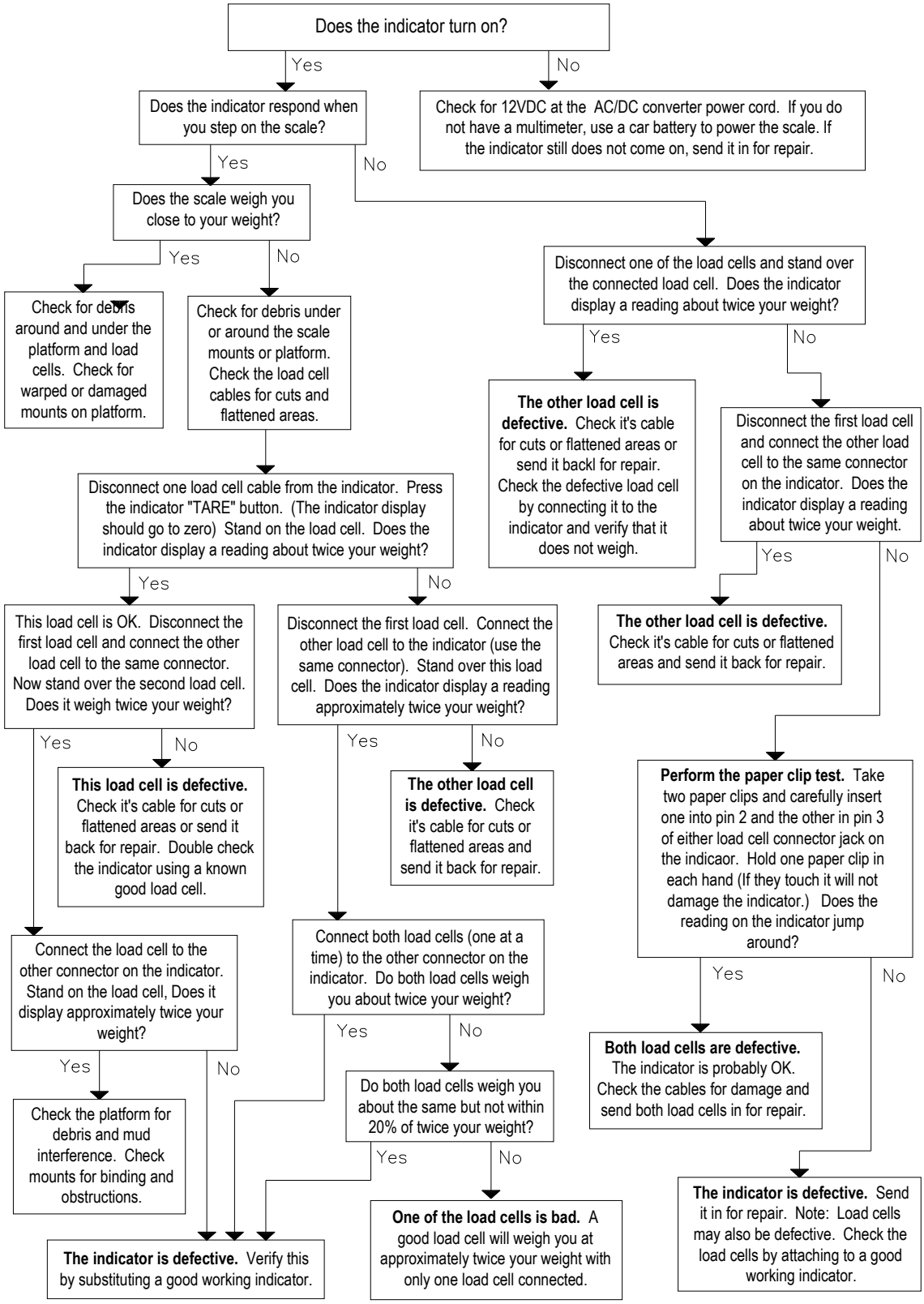

Index

+RANGE 29
1L PRT 11
Allflex™ Stick Reader 2
APRINT 11
ARANGE 12
AUTCHK 9
AUTEID 9
Auto File Retrieval 15
AUTOFF 7
Automatic mode 7
Auto-Range 12
AUTPRT 8
battery 4
C1 DLY 11
C2 DLY 11
Calibration 22
Calibration Number 20
Cap 12
Capacity 12
Clear StockWeigh 550 EID Memory 16
COUNT 11
DATE 11
Default settings 5
Display Unit 12
EID CSV Data Format 25
EID tag 3
EZ2000 Print Data Format 24
File Name 15
File Storage 15
Gross Mode 19
Installing the StockWeigh Link™ PC Software ... 14
LB-KG 12
LKNHLD 7
Load Cells 2
LOCKON 6
Lock-on - Weigh Method 18
Lock-On Store 7
Low Battery Indication 4
LSTORE 7
MAN WT 8
MANCHK 9
MANEID 8
MANPRT 7
Manual mode 7
Memory Full 4
Net Mode 19
OVRCAP 29
Power 2
Printing File from StockWeigh 550 EID 16
PRTFMT 11
-RANGE 29
Reading Eartags 3
recharging 4
Recheck Lock-On Weight 4
Scale Capacity 20
SCOREM 11
Self Test 4
Setup Number 20
Short Form Calibration 20, 22
Specifications 1
System Requirements 13
TAREAP 11
Transferring Data from Indicator to PC 14
W MTHD 6
Weigh Methods 18
Weighing Animals 3
Weighing Errors 23, 28, 29
Capacity Limit 29
Over Range 29
Under Range 29
Zero Balance 3
ZTRACK 6